HGI Part No.	17/06/2020 HENRY JTP APPROVED DOCUMENT
20-0606	

REV. 版本	ENC 工程变更通知	Description 变更描述	Name 变更人	Date 变更日期

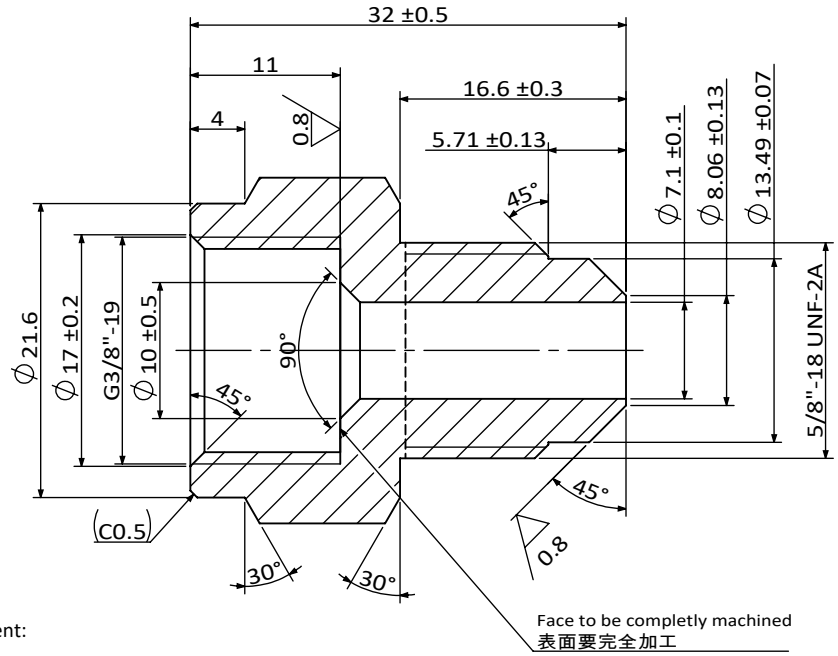

Section A-A

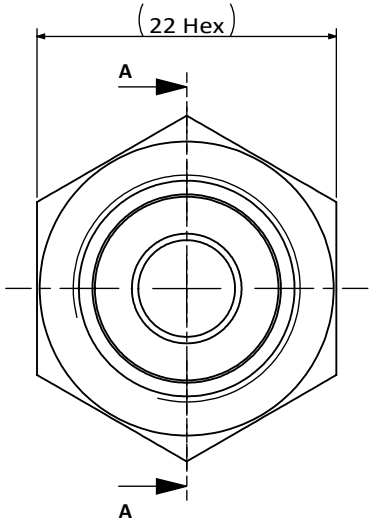

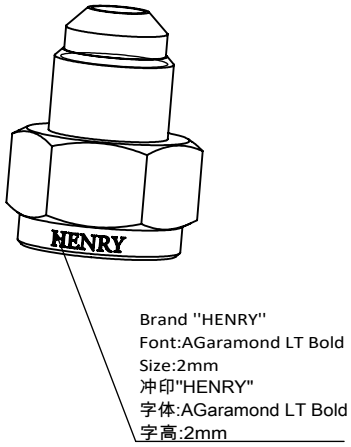

Technical Requirement:
技术要求：

1.All edges free of burr or flash;
不能有毛刺和飞边；

2.Surface should be clean and no rust(except oil stain);
表面应干净无生锈（油渍除外）

3.Material certificates must be supplied each batch;
每批产品需提供材质分析报告；

4.Unspecified geometric tolerance according to ISO 2768-K;
未注形位公差参照ISO-2768-K执行;

5.Where is not specified,the thread must be within 1 pitch from the hex shoulder;
除有特殊说明，螺纹到六角端面的距离应在1个螺距内;

6.To ensure the Logo is clear, the size of the opposite side of the hexagon shall not be smaller than the OD of the place stamped Logo.
为确保标识清晰，六角对边尺寸不能小于冲印标识处的外径.

Description 产品名称	Cylinder Adaptor 3/8" MSAE × 3/8" FBSPP 接头 3/8" MSAE × 3/8" FBSPP		
Drawing No. 图纸编号	M040202007	REV 版次	A
Material Master No. 物料编号	040202007	Drawing Size 图幅	A4
Material 材质	HPb59-1	Sheet Number 页码	1/1
Attribute 属性	3/8" MSAE × 3/8" FBSPP	Third Angle Projection 第三视角	

Dimensions inside an oval are critical dimensions
椭圆内尺寸为关键尺寸

Linear Dimensions 线性尺寸	0 Decimal Place 整数	1 Decimal Place 1位小数	2 Decimal Place 2位小数	Angular Dimensions 角度尺寸	0 Decimal Place 整数	1 Decimal Place 1位小数
	±1.0	±0.2	±0.05		±2°	±0.5°

Ra 1.6

Estimated Weight 预估重量	52.62g	Approved_by 批准	Julian Parker	2020/06/16
Scale 比例	1.8:1	Checked_by 审核	Leo Wu	2020/06/16
Unit 绘图单位	mm	Drawn_by 绘图	Zhou Lei	2020/06/11

Tolerance Unless Stated Otherwise
未注尺寸公差

HENRY