HGI Part No.	09/10/2019 HENRY JTP APPROVED DOCUMENT
S-5388-6L-customer	

☑ PED 2014/68/EU ☑ AS2971.2 ☑ UL207

☐ CAT I ☐ CAT II ☑ CAT III

Volume Ltrs	Shell ID mm	Design Pressure MPa	Leak Test Pressure MPa	Proof Test Pressure MPa	Min Burst Test Pressure MPa
7.4	Ø97/Ø145.4	3.1	3.1	4.43	15.5

REV. 版本	ECN 工程变更通知	Description 变更描述	Name 变更人	Date 变更日期
B	ECN-HT19057	Update Mounting Leg position.	Nancy Huang	2019/10/9

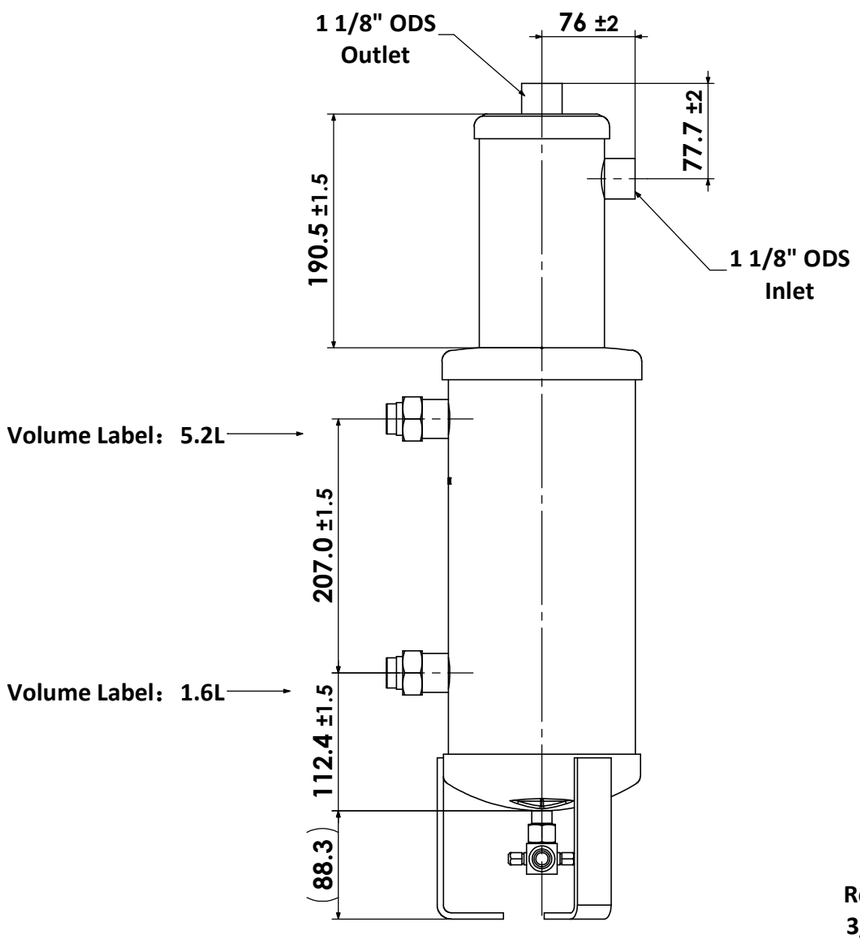

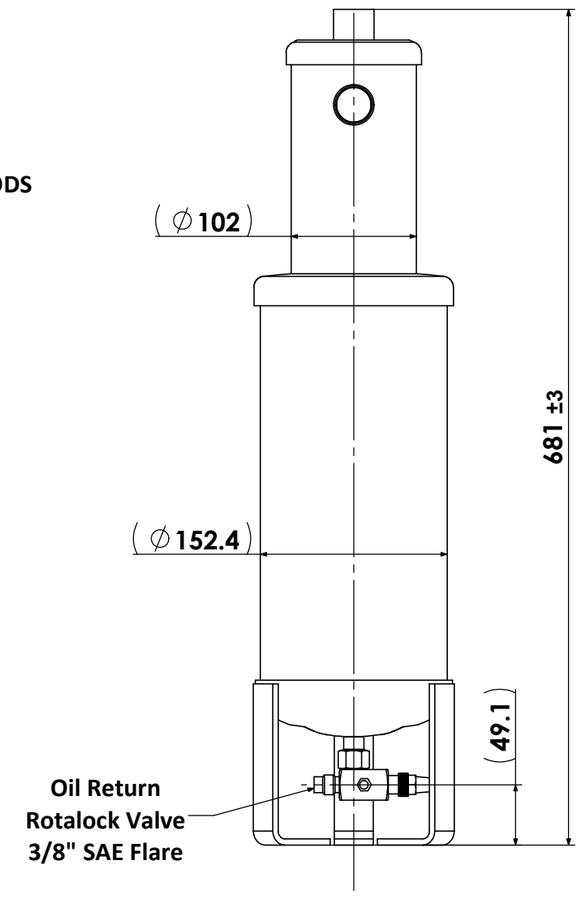

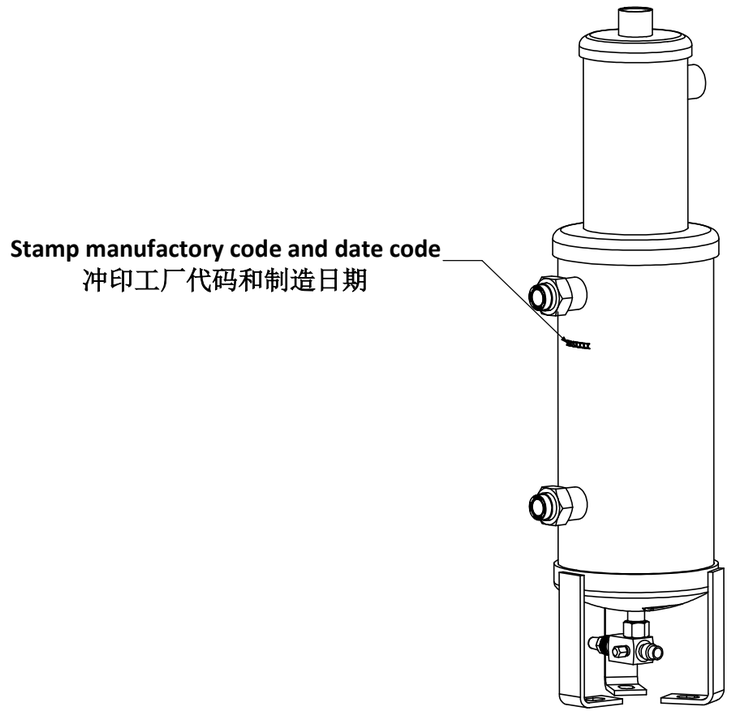

ISO 1:6

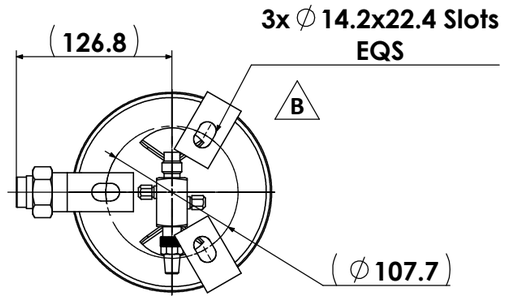

Technical Requirements:
技术要求

1. Allowable operating temperature -10°C to +130°C;
   工作温度-10°C到+130°C;
2. Powder coating: Henry Blue RAL 5013;
   喷涂颜色：亨利蓝RAL 5013 ;
3. Rotalock Valve and Gasket will be packed with product independently.
   阀和垫圈随产品单独包装。

Description 产品名称	Helical Separator Reservoir 1 1/8" ODS 螺旋油分离器 1 1/8" ODS		
Drawing No. 图纸编号	M050505110	REV 版次	B
Material Master No. 物料编号	050505110	Drawing Size 图幅	A3
Material 材质	N/A	Sheet Number 页码	1/1
Attribute 属性	1 1/8" ODS	Third Angle Projection 第三视角	

Dimensions inside an oval are critical dimensions 椭圆内尺寸为关键尺寸	Linear Dimensions 线性尺寸(mm)	0 Decimal Place 整数 ±1.0	1 Decimal Place 1位小数 ±0.2	2 Decimal Place 2位小数 ±0.05	Angular Dimensions 角度尺寸	0 Decimal Place 整数 ±2°	1 Decimal Place 1位小数 ±0.5°	Ra 1.6	Estimated Weight 预估重量	N/A	Approved_by 批准	Julian Parker	2019/8/2
	Tolerance Unless Stated Otherwise 未注尺寸公差								Scale 比例	1:5	Checked_by 审核	Leo Wu	2019/8/1
									Unit 绘图单位	mm	Drawn_by 绘图	Nancy Huang	2019/8/1

HENRY ®